Previous Years Question

Delay

Q-1:

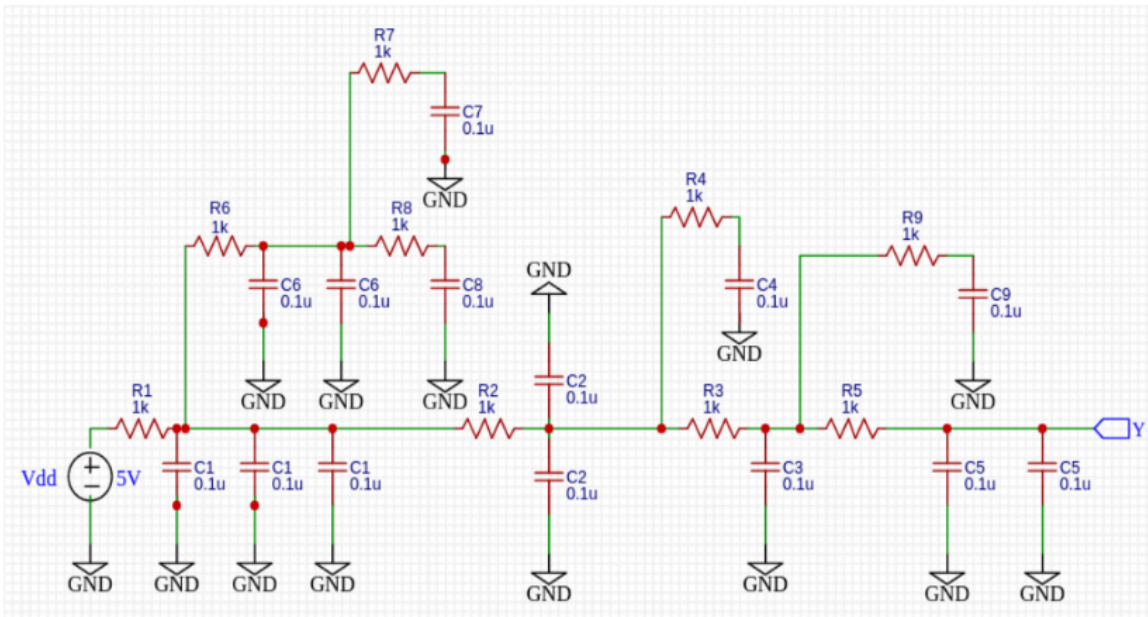

Figure3: A RC network

(a)	Draw the simplified RC network for Figure 3.	**2**
(b)	i) Determine the expression for the elmore delay, $\mathbf{t_{pd}}$ for node Y. ii) Calculate $\mathbf{t_{pd}}$ in s (second) from the simplified RC expression from (i)	**4+2**

Q-2:

A CMOS compound gate, **Y=** $\overline{A + B + C}$ is driving h identical CMOS compound gates with same function in a 1 μm process

(a)	**Identify** and **design** the CMOS circuit (indicate both nMOS and pMOS networks).	**2**
(b)	**Determine** the individual transistor widths k_{nMOS} and k_{pMOS} to achieve the effective rise and fall resistance equal to that of a unit inverter, R, in the worst case.	**2**
(c)	**Sketch** the simplified RC circuit.	**5**
(d)	**Derive** the expressions for t_{pdf} and t_{cdf}. (Sketch the *corresponding* RC network from part (c) to derive the expressions.)	**6**

Q-3:

Consider the following truth tables for two logic gates

A	B	Y
0	0	1
0	1	1
1	0	1
1	1	0

Gate 1

A	B	Y
0	0	1
0	1	0
1	0	0
1	1	0

Gate 2

(a)	**Identify** the logic gates and draw their CMOS circuit representation.	**2**
(b)	**Determine** the individual transistor widths k_{nMOS} and k_{pMOS} for both of the gates to achieve the effective rise and fall resistances equal to that of a unit inverter, **R**, in the worst case.	**2**
(c)	**Draw** the simplified RC circuit only for **Gate 1** and **determine** the input capacitance of **Gate 2** in terms of **C**	**4+1**
(d)	Consider **Gate 1** is driving **12** identical **Gate 2** circuits (only one of the inputs of each). Now **derive** the expressions for t_{pdf} and t_{cdf} by **sketching** the corresponding RC networks from **(c)**.	**6**

Q-4:

A 4-input NOR gate is driving two 2-input NOR gates and two unit inverters at its output as shown in the circuit diagram below:

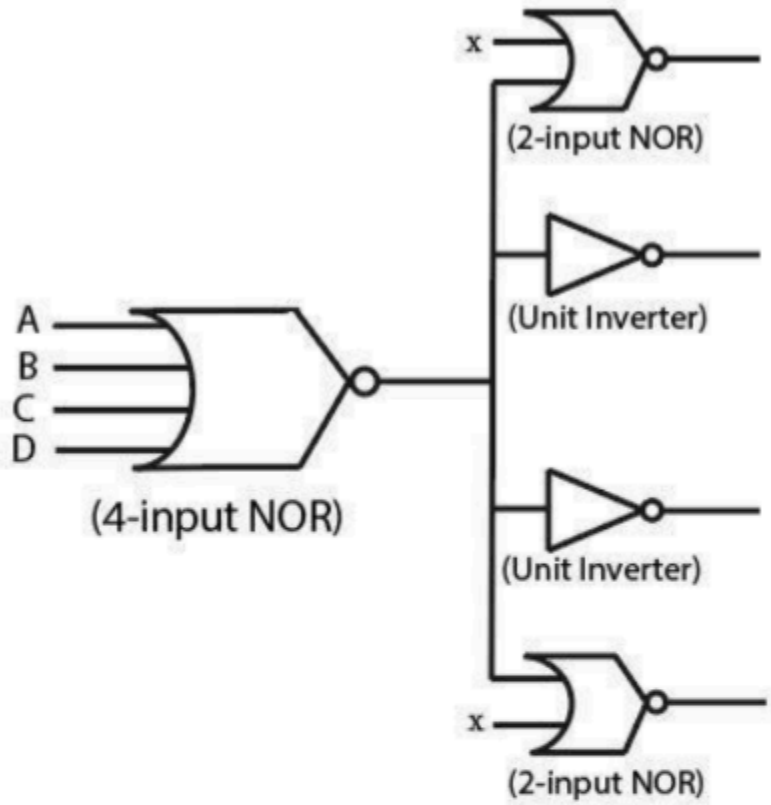

(a)	Assuming all diffusion nodes are contacted, draw the CMOS diagram of the circuit along with the corresponding width parameter specifications of the transistors required to achieve equal rise and fall resistances of that of a unit inverter.	4
(b)	Draw the RC equivalent circuit. (You don't need to draw the full RC circuits of the loads, only show the capacitances offered by the individual loads at the output of the driver)	3
(c)	Derive the expressions for the worst-case falling propagation delay (t_{pdf}).	4
(d)	Derive the expressions for the best-case rising contamination delay (t_{cdr}).	4

Q-5:

Observe the figure and the truth table and answer the following questions. Assume the effective rise and fall resistances of all the components are equal to that of a unit inverter (**R**) in the worst case.

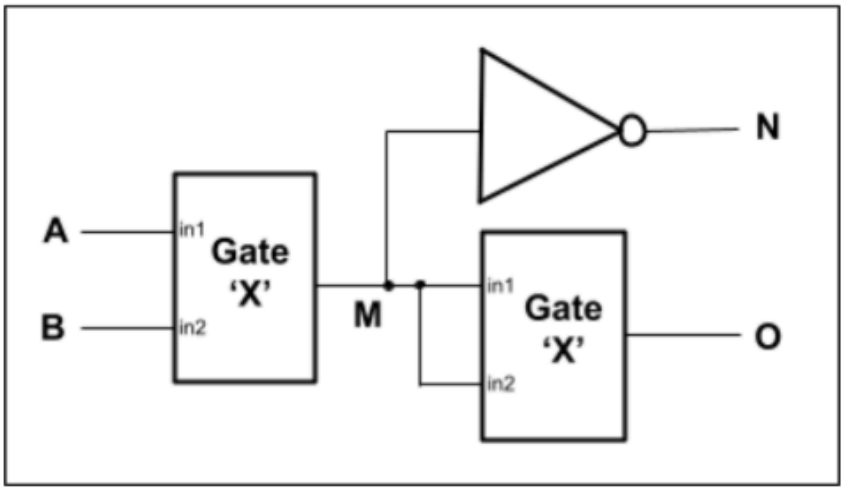

Figure: Two-input CMOS gate 'X' is driving another 'X' gate and an inverter.

Truth Table for node N

A	B	N
0	0	0
0	1	0
1	0	0
1	1	1

(a)	**Identify** gate 'X'.	**[2]**
(b)	**Calculate** the capacitances of nodes A, B, and M with the necessary figures.	**[6]**
(c)	**Calculate** 'propagation delay rise (t_{pdr})' at node M.	**[4]**
(d)	'N and O nodes have identical outputs but the N node is faster' - do you agree with the statement? **Explain** qualitatively.	**[3]**

Q-6:

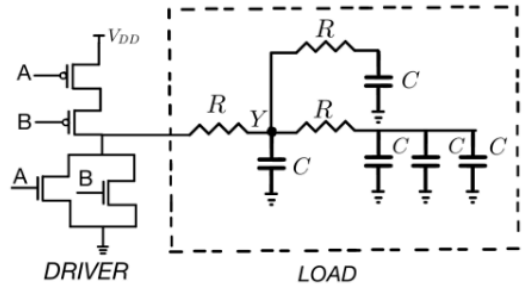

Figure 2: Circuit Diagram for Q.3

(a)	**Find** the individual transistor widths k_{nMOS} and k_{pMOS} for the <u>*Driver*</u> to achieve the worst-case effective rise and fall resistance equal to that of a unit inverter, R.	**2**
(b)	**Draw** the simplified RC circuit for Figure 2.	**5**
(c)	i) **Derive** the expressions for t_{pdr} and t_{pdf} for node **Y.** ii) **Calculate** t_{pdr} and t_{pdf} in s (second) from the simplified RC expression from (i) when R= 1 kΩ and C= 2 pF.	**6+2**

Q-7:

Suppose the output of a 4-input NAND gate is connected to two logic gates. One of the logic gates inverts the signal, and the other gate gives a HIGH output only when all three of its inputs are LOW. Consider that we will design for equal fall and rise times. For (b), (c), and (d), assume $\mu_n = 2\mu_p$.

(a)	Assuming $\mu_n = 10\mu_p$., **find** k_n and k_p for a NOR-2 and a NOR-5000 gate.	**[1+2]**
(b)	**Identify** the gates used as loads in the stem and calculate the value of C_{load} in terms of C.	**[1+2]**
(c)	**Draw** the RC equivalent circuit of the 4-input NAND gate. Include C_{load} found in (b).	**[4]**
(d)	Use the Elmore delay model to **find** the expressions for tcdr, tpdr, tcdf, and tpdf	**[5]**

Q-8:

A facility room has 3 temperature sensors placed at 3 corners, each with two output pins:

1. Analog temperature value pin (not considered here).
2. Green LED pin that indicates whether the sensor is functional:
   - High (1): Sensor is functional, and the LED is on.
   - Low (0): Sensor is not functional, and the LED is off.

If all three sensors (A, B, C) stop working simultaneously, an alarm must be triggered. Even if only one or two sensors stop working, the remaining functional sensors provide temperature data correctly.
Jim and Campbell are tasked to design a logic device that:

1. Triggers an alarm (output = HIGH) when all three LEDs are LOW.
2. Does nothing (output = LOW) otherwise.

Jim finally decided to implement a 3-input XOR gate, whereas Campbell chose a 3-input NOR gate to use as the alarm trigger. Take **A, B, C** as the inputs to the gates where A, B, C indicate the LED status(ie ON or OFF) of 1st, 2nd and 3rd sensor respectively.
[Choose widths of PMOS and NMOS transistors to achieve worst-case effective rise and fall resistance equal to that of a unit inverter (R)]

(a)	Whose design is correct- **Justify.**	**[1]**
(b)	**Draw** the CMOS circuit of the correct logic function and derive the RC equivalent circuit.	**[4]**
(c)	**Calculate** t_{pdf} , t_{cdf} ,t_{pdr} ,t_{cdr} for the circuit if the output is driving 'h' number of 2-input NAND gates as its load [Choose widths of PMOS and NMOS transistors to achieve effective rise and fall resistance equal to that of a unit inverter (R)]	**[4]**
(d)	**Identify** the parasitic and effort delay from the t_{pdf}.	**[2]**
(e)	For λ = 10 nm, if R = 5 kΩ.µm, C = 20 fF/µm, **find** the values of the delays whose expressions you found in **(c)**. Take h=5.	**[4]**

Q-9:

Bob is a chip designer who works specifically on the $\lambda = 0.25$ µm process. However, he has messed up the layout design of a **3-input NAND gate** (Figure 2(a)) because of which, the NAND gate has **an equivalent rise resistance that is four times its equivalent fall resistance.** Also, the NAND gate's **equivalent rise resistance is 1.5 the rise resistance of a unit inverter** for that design process. But at least he made sure to keep the source-drain terminals shared where possible to reduce capacitance. The gate capacitance and parasitic (diffusion) capacitance of are **2.42 fF/µm.**

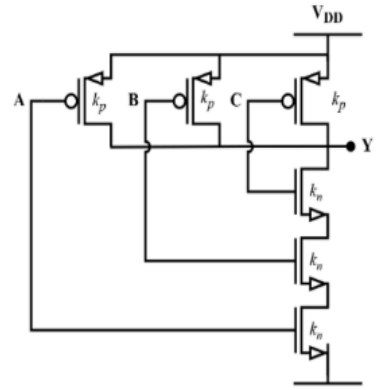

Figure 2(a): CMOS implementation of a 3 - input NAND gate

This **NOR gate** is loaded with a **Unit inverter** and the output node **Y** has a voltage waveform as shown in Fig. 2(c).

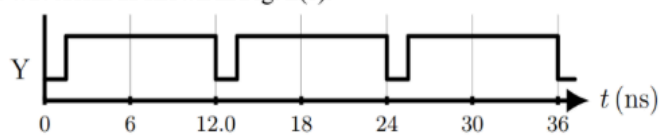

Figure 2(c): Voltage waveform at node **Y**

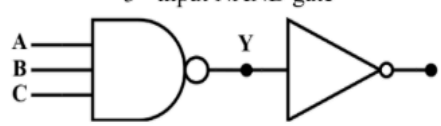

Figure 2(b): A 3-input NAND gate loaded with a **Unit Inverter**

(a) **Find** the value of width scaling factors - k_p and k_n of the NOR gate designed by Bob. Thereafter, calculate the actual width of the **pMOS** and **nMOS**. **[2]**

(b) **Draw** the RC equivalent model of the above 3-input NAND gate. Lump the capacitances together where possible. **[5]**

(c) **Find** the capacitance of the **Y** node (in **fF** units), when it is loaded with a unit inverter, as shown in Fig. 2(b). **[3]**

(d) Find the best-case rising edge **contamination delay (t_{cdr})** of **Y**-node in terms of **R** and **C** of unit MOS. **[2]**
[**Hint:** You do not need Elmore modelling. All three NMOS are off. Three PMOS resistances are in parallel.]